ISSN-L: 2223-9553, ISSN: 2223-9944
Vol. 2, No. 1, January 2012

AUTONOMOUS FIVE LEGS RESCUE ROBOT NAVIGATION IN CLUTTERED ENVIRONMENT

Prihastono
Bhayangkara Surabaya University, and Sepuluh Nopember Institut of Technology, INDONESIA
prihtn@yahoo.com

Khairul Anam
University of Jember
INDONESIA
Kh_anam_unej@yahoo.com.sg

Rusdhianto Effendi
Sepuluh Nopember Institute of Technology, INDONESIA
rusdhianto@ee.its.ac.id

Ari Santoso
Sepuluh Nopember Institut of Technology
INDONESIA
arisantoso@ee.its.ac.id

Achmad Jazidie
Sepuluh Nopember Institute of Technology
INDONESIA
jazidie@ee.its.ac.id

ABSTRACT

To realize the intelligent system in the robot that does not depend on the environment model. This research focused on five legs robot that inspired from sea star (phylum echinodermata). For cluttered environment, it is necessary to uses more than one learning module to control navigation of five legs robot. This paper proposes the use of hybrid coordination node to coordinate multi fuzzy Q-learning module. The fuzzy Q-learning was incorporated in behavior-based control structure and was considered as generation of primitive behavior like obstacle avoidance. The results of this research through simulation with webots version 6.1.0.and implemented through experiments

Keywords: five legs robot, Q-learning, hybrid coordination node, behavior based control

INTRODUCTION

Research into rescue robotics was triggered by the Great Hanshin-Awaji Earthquake in Kobe in 1995,[1]. Search and rescue (SAR) robotics can be defined as the utilization of robotics technology for human assistance in any phase of SAR operations [2]. Robotic SAR devices have to work in extremely unstructured and technically challenging areas shaped by natural forces. One of the major requirements of rescue robot design is the flexibility of the design for different rescue usage in disaster areas of varying properties. Rescue robotic devices should be adaptable, robust, and predictive in control when facing different and changing needs. Intelligent, biologically inspired mobile robots and, in particular hexapod walking robots have turned out to be widely used robot types beside serpentine mechanisms; providing effective, immediate, and reliable responses to many SAR operations.

The proposed robot is mechanism five legs that inspired from sea star (phylum echinoderm). The robots is development of four legs robot. Legged robot stability lies in the number of feet stuck to the ground, ie at least 3 feet must be attached to the ground each time step, for four-legged robot on the soil conditions are not structured it will be difficult to get stable when he walked, because each step only two legs are touching land. Research-legged robots more than one that has developed in even-numbered legs are like four-legged robot, six, eight are inspired by biological animal.

In the six-legged robot, or more, require more degrees of freedom, if one leg requires three degrees of freedom, then to six feet will be required eighteen degrees of freedom which would require eighteen srvo motors,

Copyright © 2012 SAVAP International
www.savap.org.pk

although the stability to meet the requirements of step with the growing number of motor used, will increase the amount of current consumption.

To realize the intelligent system in the robot that does not depend on the model, this research used reinforcement learning algorithm to find the optimal gait when the robot is walking. To achieve this goal, is used to provide learning through an interaction between robot and environment based on a policy of reward and punishment. For cluttered environment, it is necessary to uses more than one learning module to control navigation of five legs robot. However, the use of multi fuzzy Q-learning demands the existence of coordination system as module learning coordinator. Learning by biasing is one alternative that has been used to coordinate multi fuzzy Q-learning

One method that has been widely used is Q-learning. However, since Q-learning deals with discrete actions and states, an enormous amount of states may be necessary for an autonomous five legs robot to learn an appropriate action in a continuous environment. Therefore, Q-learning can not be directly used to such a case due to the problems of the curse of dimensionality.

The hybrid coordinator takes advantage of competitive and cooperative approaches. The hybrid coordinator allows the coordination of a large number of behaviors without the need of a complex designing phase or tuning phase. This paper presents collaboration between Fuzzy Q-Learning and Behavior based control. Most of authors have developed fuzzy q-learning to generate a behavior that is constructed by learning continuously to maximize discounted future reward. However, most of them only focus on generating a behavior for simple environment. For complex environment, it is necessary to incorporate FQL in behavior-based schema. Therefore, this paper proposes behavior based schema that uses hybrid coordination node to coordinate some behaviors iether from FQL generation or from behavior that is designed in design step. Proposed schema is adapted from. High-level controller consists of four behaviors and one HHCN. The four behaviors are stop, obstacle avoidance-FQL, searching target-FQL, and wandering. Stop behavior has highest priority and wandering behavior has lowest priority. Each behavior is developed separately and there is no relation between behaviors. The output of high-level controller is speed setting to low level controller and robot heading.

SYSTEM DESIGN

Design of this robot consists of a mechanical design for legged robots, control circuit design and software design.

Mechanical Design

Five-legged robot design is the development of four-legged robot. Five-legged robot excess of four-legged robot is in motion systems. Stability is obtained if a minimum of 3 points touching the ground (3-contact point), the five-legged robot can use each one 2 foot stride and run faster.

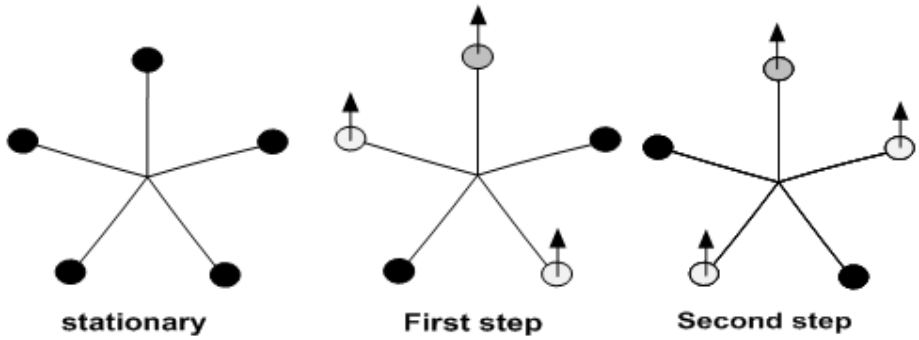

Figure 1. Movement Mechanism

Naming the foot robot based on the location of each leg, front leg (FC) serves as a leg aids. A pair of legs in the right (FR and BR) and a pair of legs on the left (FL and BL) serves as a major feet as four-legged robot.
The amount of joints on each legs will decide the Degree of Freedom (DOF) where in this case there will be 3 DOF for each leg. The gait is an order for the lift and release activity on each legs. It's depends at the amount of the legs. The number of possible gate event can be formulated with: **N=(2k-1)!**

Copyright © 2012 SAVAP International

ISSN-L: 2223-9553, ISSN: 2223-9944
Vol. 2, No. 1, January 2012

Angle joint on hinge base of the legs is referred to the point that can be reached by leg movement of joints that are most close to the body of robot (center of body). Because there are five legs, between the legs with one leg to the other leg is 72° away. So that each leg can move 72° (clockwise) and -72° (counter clockwise). But in reality, robot can only reach -50° to 50° because of mechanical robot legs require some space. Angle joint on hinge base of the legs is shown in Figure 2.

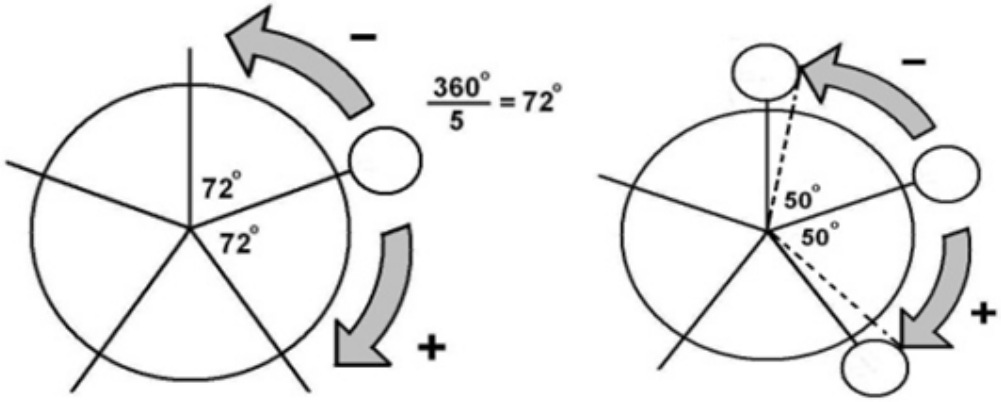

Figure 2. Angle joints which formed the base of leg and reduction of the base angle joints legs.

Velocity of robot is resulted by time delay every movement joint on the robot legs. This parameter is given on the value of the function of delay in the program microcontroller. Before calling this function, interrupt will be turned off, and time delay will be longer than expected.
To realize a 5-legged robot, the first step is making the way of simulation, followed by the making of the robot. This robot simulation using package programs Webots version 6.1.0 made by Cyberbotics

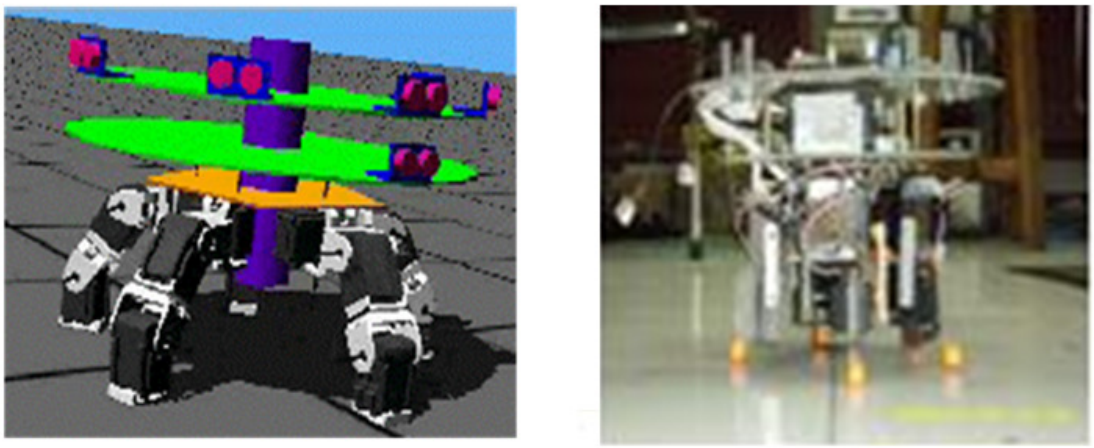

a) b)

Figure 3. a) Simulation and b) experiment robot

Control Circuit Design

Electronic control circuit consists of one master microcontroller ATMega 1280 and four other controllers AT Mega 164 as slave. Ultra sonic sensors to detect the distance with robot obstacle (obstruction), Ping)))™, and actuators as outputs using the servo motor type HS-422 (see Figure 4).

Copyright © 2012 SAVAP International

ISSN-L: 2223-9553, ISSN: 2223-9944
Vol. 2, No. 1, January 2012

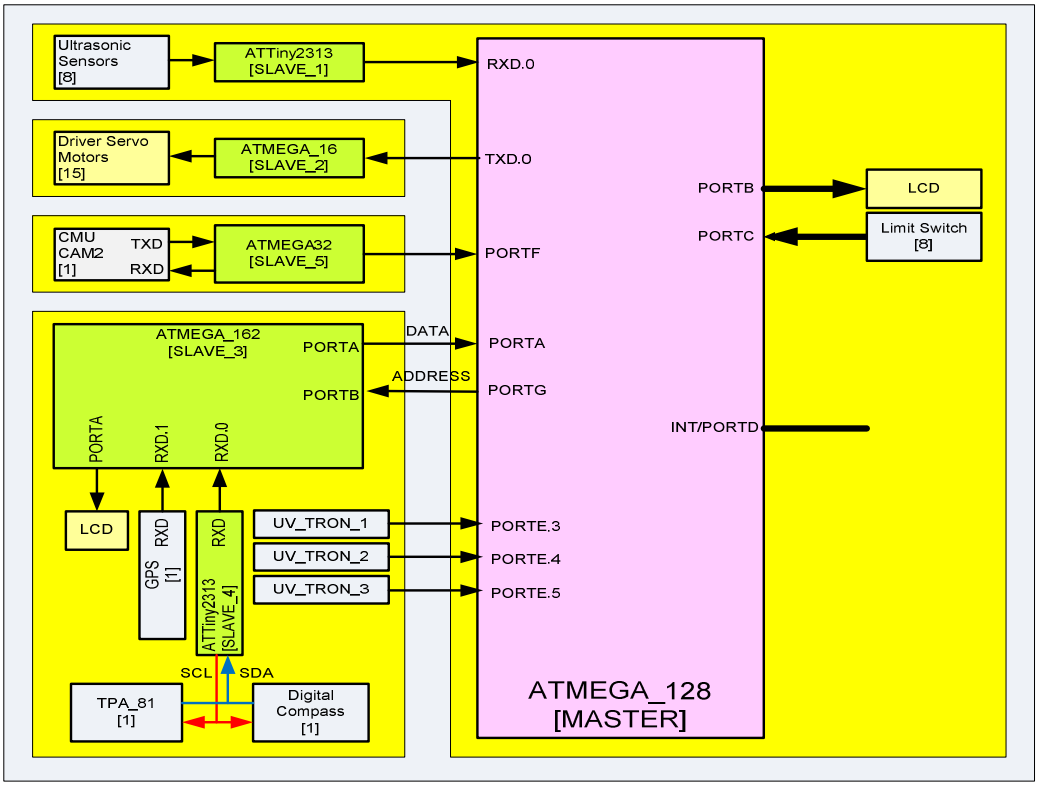

Figure 4. Control electronic Circuit

Behavior Based Control

This paper considers hierarchical control structure (see Fig. 5) that showing two layers: high level controller and low level controller.

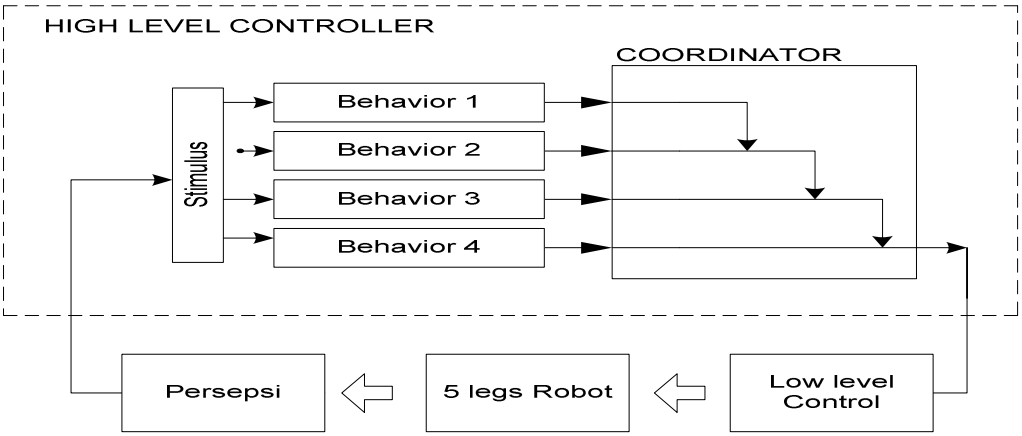

Figure 5. Behavior Base Control Schema

High level controller is behavior-based layer that consists of a set of behaviors and a coordinator. This paper uses hybrid coordinator that was proposed by Carreras [14]. The hybrid coordinator takes advantage of competitive and cooperative approaches. The hybrid coordinator allows the coordination of a large number of behaviors without the need of a complex designing phase or tuning phase. The addition of a new behavior only

Copyright © 2012 SAVAP International

implies the assignment of its priority with reference to other behaviors. The hybrid coordinator uses the priority and behavior activation level to calculate the output of the layer, which is the desired control action input to the low-level control system Therefore, the response of each behavior, is composed of the activation level and the control action, as illustrated in Fig. 6[13].

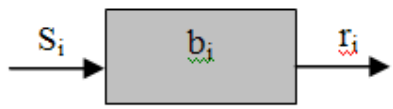

Figure 6. Behavior Normalization

Before entering the coordinator, each behavior is normalized. S_i is ith behavior and r_i is ith result of behavior normalization that consist of expected control action vi and activation level (degree of behavior), $a_i \rightarrow 0 - 1$. Behavior coordinator uses r_i behavior responses to compose control action of entire system. This process is executed each sampling time of high level controller.

The coordination system is composed of set of ni nodes. Each node has two inputs and one output. The inputs are dominant input and non-dominant input. The response that is connected to dominant input has higher priority than the response that is connected to non-dominant input. The node output consists of expected control action vi and activation level ai.

When dominant behavior is fully activated, i.e. $a_d=1$, node output is same as dominant behavior. In this case, the node behaves like competitive coordination.

However, when dominant behavior is partly activated, i.e. $0 < a_d < 1$, the node output is combination of two behaviors, dominant behavior and non-dominant behavior. When $a_d=0$, the node output will behave like non-dominant behavior. Set of nodes construct a hierarchy called Hierarchical Hybrid Coordination Nodes (HHCN) (see Figure 7).

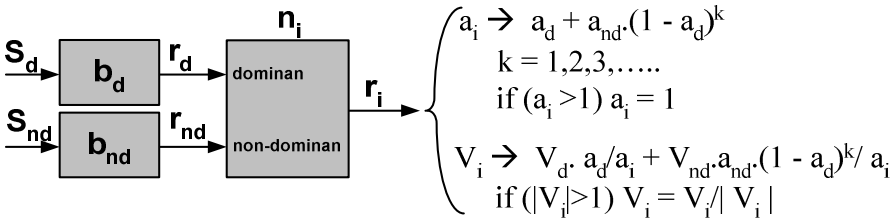

Figure 7. Mathematical formulation of node output [14]

The low-level controller is constructed from conventional control i.e. PID controller. The input is derived from output of high-level controller, so the velocity setting that must be accomplished by motor. This controller has responsibility to control speed motor so that the actual speed motor is same or almost same as the velocity setting from high-level controller.

FQL and HHCN for robot control

This paper presents collaboration between Fuzzy Q-Learning and hybrid coordination node. Most of authors have developed fuzzy q-learning to generate a behavior that is constructed by learning continuously to maximize discounted future reward. However, most of them only focus on generating a behavior for simple environment as showed by Deng[11], M.J. Er [12]. For cluttered environment, it is necessary to use multi-FQL that is coordinated by hybrid coordination node. Proposed schema is adapted from [14] and described in Figure 8.

Copyright © 2012 SAVAP International
www.savap.org.pk

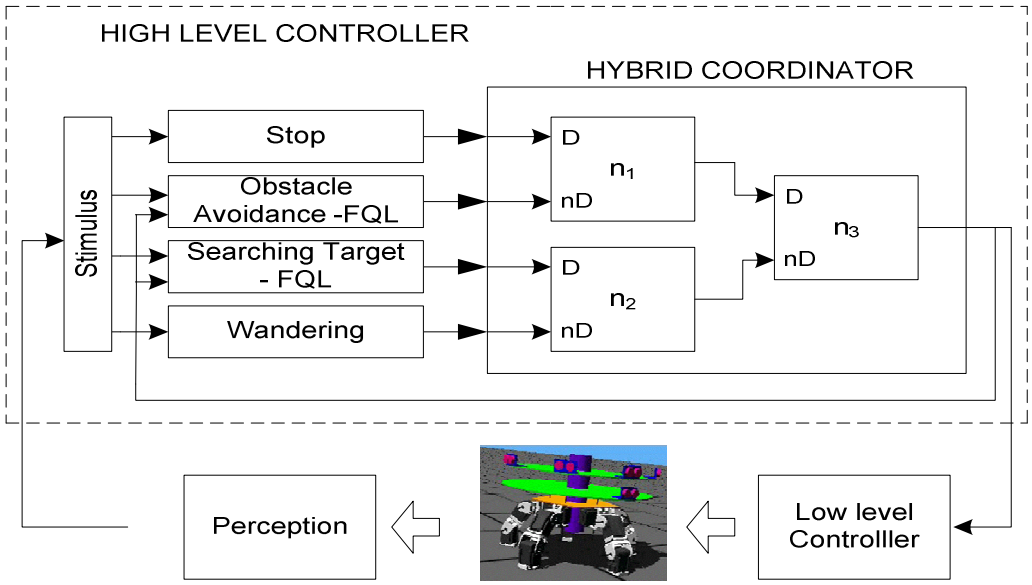

Figure 8. Fuzzy Q learning in behavior base

In figure 8, High-level controller consists of two behaviors and one hybrid coordination node. The two behaviors are obstacle avoidance-FQL(OA-FQL) and target searching –FQL (TS-FQL). OA-FQL has higher priority than TS-FQL. Each behavior is developed separately and there is no relation between behaviors. The output of high-level controller is speed setting to low level controller and robot heading.

The obstacle avoidance-FQL behavior is behavior that is generated by Fuzzy Q-learning. This behavior has task to avoid every object which is encountered and detected by the ranging finding sensors. The input is distance data between robot and the object from three IR range finder sensors. Output of the range finder sensors is integer value from 0 to 1024. The zero value means that the object is far from the robot. On the contrary, the 1024 value means that the robot has collided the object. The action set consists of five actions: {turn-right, little turn-right, move-forward, little turn-left, turn-left}.

The reinforcement function is directly derived from the task definition, which is to have a wide clearance to the obstacles. Reinforcement signal r penalizes the robot whenever it collides with or approaches an obstacle. If the robot collides or the distance more than 1000, it is penalized by a fixed value, i.e. -1. if the distance between the robot and obstacles is more than a certain threshold, d_k = 300, the penalty value is 0. Otherwise, the robot is rewarded by 1. The component of the reinforcement that teaches the robot keep away from obstacles is:

$$r = \begin{cases} -1 & if\ collision,\ d_s > 1000 \\ 0 & if\ d_s > d_k \\ 1 & otherwise \end{cases} \tag{8}$$

where d_s is the shortest distance provided by any of IR sensor while performing the action. The value of activation parameter is proportional to the distance between the sensors and the obstacle.

The searching target behavior has task to find and go to target. The goal is to follow a moving light source, which is displaced manually. The two light sensors are used to measure the ambient light on different sides of the robot. The sensors value is from 0 to 1024. The action set consists of ten actions: {turn-right, little turn-right, forward, little turn-left, turn-left, rotate, shift-right, shift-left, and backward}. The robot is rewarded when it is faced toward the light source, and receives punishment in the other cases.

$$r = \begin{cases} -1 & if\ d_s < 300 \\ 0 & if\ d_s < 800 \\ 1 & otherwise \end{cases} \tag{9}$$

where d_s is the largest value provided by any of light sensor while performing the action.

Copyright © 2012 SAVAP International

ISSN-L: 2223-9553, ISSN: 2223-9944
Vol. 2, No. 1, January 2012

RESULTS AND DISCUSSIONS

Simulation

a. First result simulation for wondering used Webots 6.1.0 can be seen in Fig. 9.

b. Second result simulation for searching target used Webots 6.1.0 can be seen in Fig 10

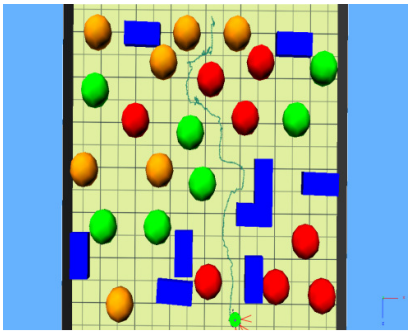

Figure 1. Simulation wondering

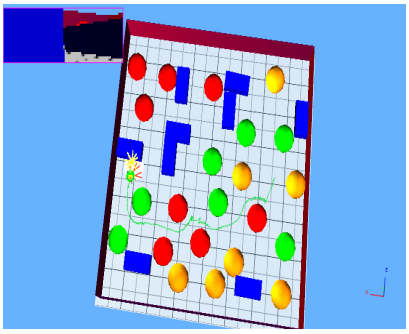

Figure 2. Simulation reach target and Obstacle Avoidance Behavior

Experimental Results

This is the implementation result of five legs robot. These snapshots show robot movement when avoiding obstacle.

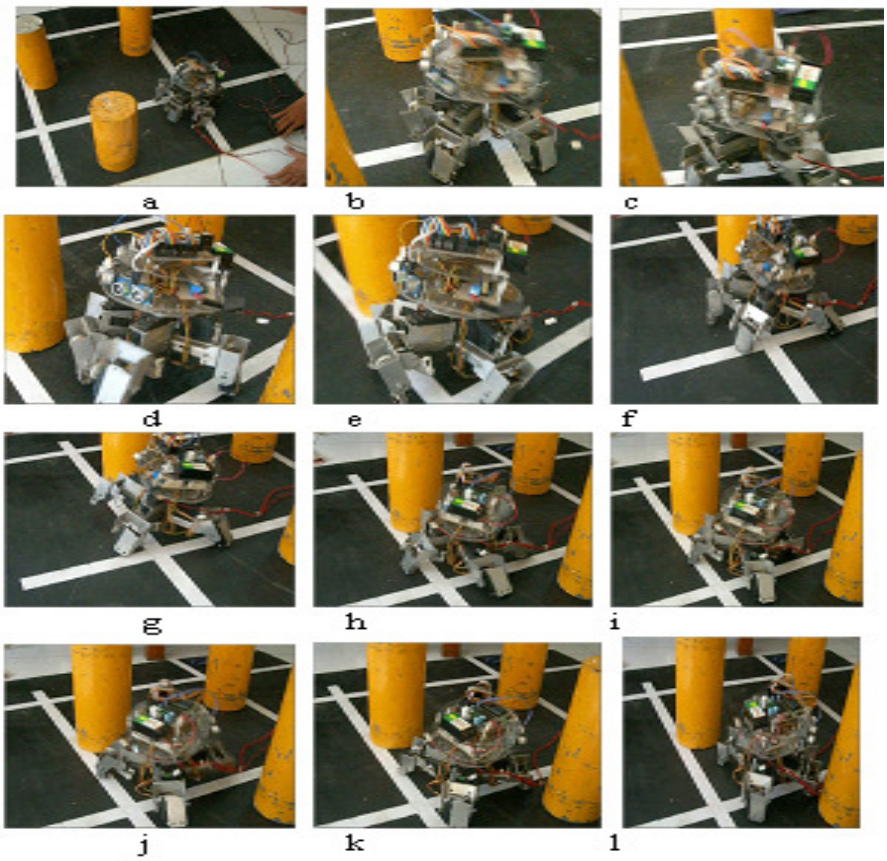

Figure 3. Snapshot of five legs robot movement

Copyright © 2012 SAVAP International

CONCLUSION

This paper proposes the use of hybrid coordination node to coordinate multi fuzzy q-learning behavior for navigation of autonomous five legs robot in cluttered environment. Simulation results demonstrate that coordination of multi fuzzy q-learning by using hybrid coordination node enables the robot to learn the right policy, to avoid obstacle and to find the target. It also showed that the use of hybrid coordination node can speed up the learning time of fuzzy q-learning.

In the beginning implementation result is same with simulation. But there is different time to finish the task, because the real robot depends on its motor and sensor characteristic.

ACKNOWLEDGEMENT

This work is being supported by Japan International Cooperation Agency (JICA) through Technical Cooperation Project for Research and Education Development on Information and Communication Technology in Sepuluh Nopember Institute of Technology (PREDICT - ITS).

REFERENCES

[1]. Tadokoro S, “Rescue Robotics”,Springer 2009 ISBN 978-1-84882-473-7

[2]. Inagaki, K. *Gait study for hexapod walking with disabled leg. Intelligent Robot and Systems*, 1997. IROS '97. Proceedings of the 1997 IEEE/RSJ International Conference on Volume 1, 7-11 Sept (1997). pp: 408-413.

[3]. Yang, GS, Chen, ER, Wan, C., ”Mobile Robot Navigation Using Neural Q Learning”, *Proceeding of the Third International Conference on Machine learning and Cybernatics*, Shanghai, Cina, Vol. 1,p. 48 – 52, 2004.

[4]. Huang, BQ, Cao, GY, Guo, M. ,"Reinforcement Learning Neural Network to The Problem Of Autonomous Mobile Robot Obstacle Avoidance "*IEEE Proceedings of the Fourth International Conference on Machine Learning and Cybernetics*, Guangzhou, Vol. 1, p. 85-89, 2005.

[5]. Jouffe,L,"Fuzzy Inference System Learning By Reinforcement Methods", *IEEE Transactions On Systems, Man, And Cybernetics—Part C: Applications And Reviews*, Vol. 28, No. 3, August 1998.

[6]. Glorennec, P.Y., Jouffe,L, ”Fuzzy Q-learning”, *Proceeding of the sixth IEEE Internasional Conference on Fuzzy Sistem*, Vol. 2, No. 1, hal. 659 – 662, 1997.

[7]. CharlesW. Anderson1, Douglas C. Hittle2, Alon D. Katz2, and R. Matt Kretchmar, "Synthesis of Reinforcement Learning, Neural Networks, and PI Control Applied to a Simulated Heating Coil", *Elsevier : Artificial Intelligence in Engineering*, Volume 11, Number 4, pp. 421-429(9), October 1997.

[8]. Tomoharu Nakashima, Masayo Udo, and Hisao Ishibuchi, "Implementation of Fuzzy Q-Learning for a Soccer Agent", *The IEEE International Conference on Fuzzy Systems*, 2003.

[9]. Ishibuchi, H, Nakashima, T., Miyamoto, H., Chi-Hyon Oh,"Fuzzy QLearning for a Multi-Player Non-Cooperative Repeated Game", *Proceedings of the Sixth IEEE International Conference on Fuzzy Systems*, Volume 3, Issue , Page:1573 - 1579 vol.3, 1997.

[10]. Ho-Sub Seo, So-Joeng Youn, Kyung-Whan Oh, "A Fuzzy Reinforcement Function for the Intelligent Agent to process Vague Goals", 19th International Conference of the North American Fuzzy Information Processing Society-NAFIPS, Page(s):29 – 33, 2000.

[11]. C. Deng, M. J. Er and J. Xu, "Dynamic Fuzzy Q-Learning and Control of Mobile Robots", *8th International Conference on Control, Automation, Robotics and Vision*, Kunming, China, 6-9th December 2004.

Copyright © 2012 SAVAP International
www.savap.org.pk

[12]. Meng Joo Er, Member, IEEE, and Chang Deng, "Online Tuning of Fuzzy Inference Systems Using Dynamic Fuzzy Q-Learning", *IEEE Transactions On Systems, Man, And Cybernetics*, Vol. 34, No. 3, June 2004.

[13]. Watkins C., Dayan P.,"Q-learning, Thech-

nical Note", *Machine Learning*,Vol 8, hal 279-292, 1992.

[14]. Carreras, M, Yuh, J, Batlle, J, Ridao, P "A Behavior-Based Scheme Using Reinforcement Learning for Autonomous Underwater Vehicles", IEEE Journal Of Oceanic Engineering, Vol. 30 No. 2, April 2005.

Copyright © 2012 SAVAP International
www.savap.org.pk